AlphaEclipse 3600 Sign Network Wiring Diagram

NOTES:

(1) Use this wiring for two signs connected as either Master/Master or Master/Slave.

(2) If a temperature probe is used, connect WIRE 1, WIRE 2, WIRE 3, and WIRE 4.

(3) If a temperature probe is *not* used, only connect WIRE 1, WIRE 2, and WIRE 3.

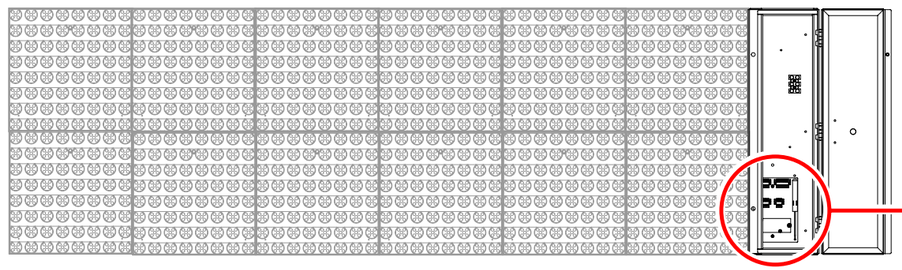

SLAVE or MASTER SIGN ADDRESS 02

Wireway

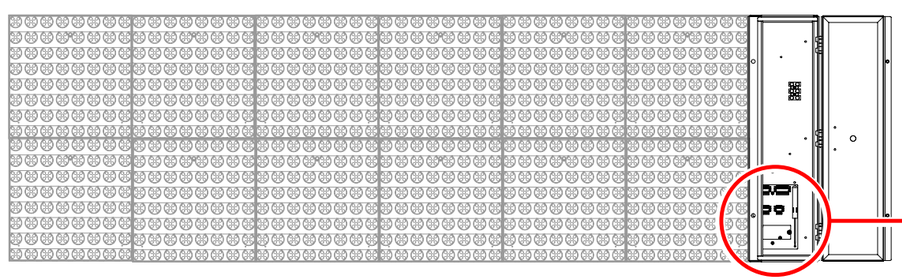

MASTER SIGN ADDRESS 01

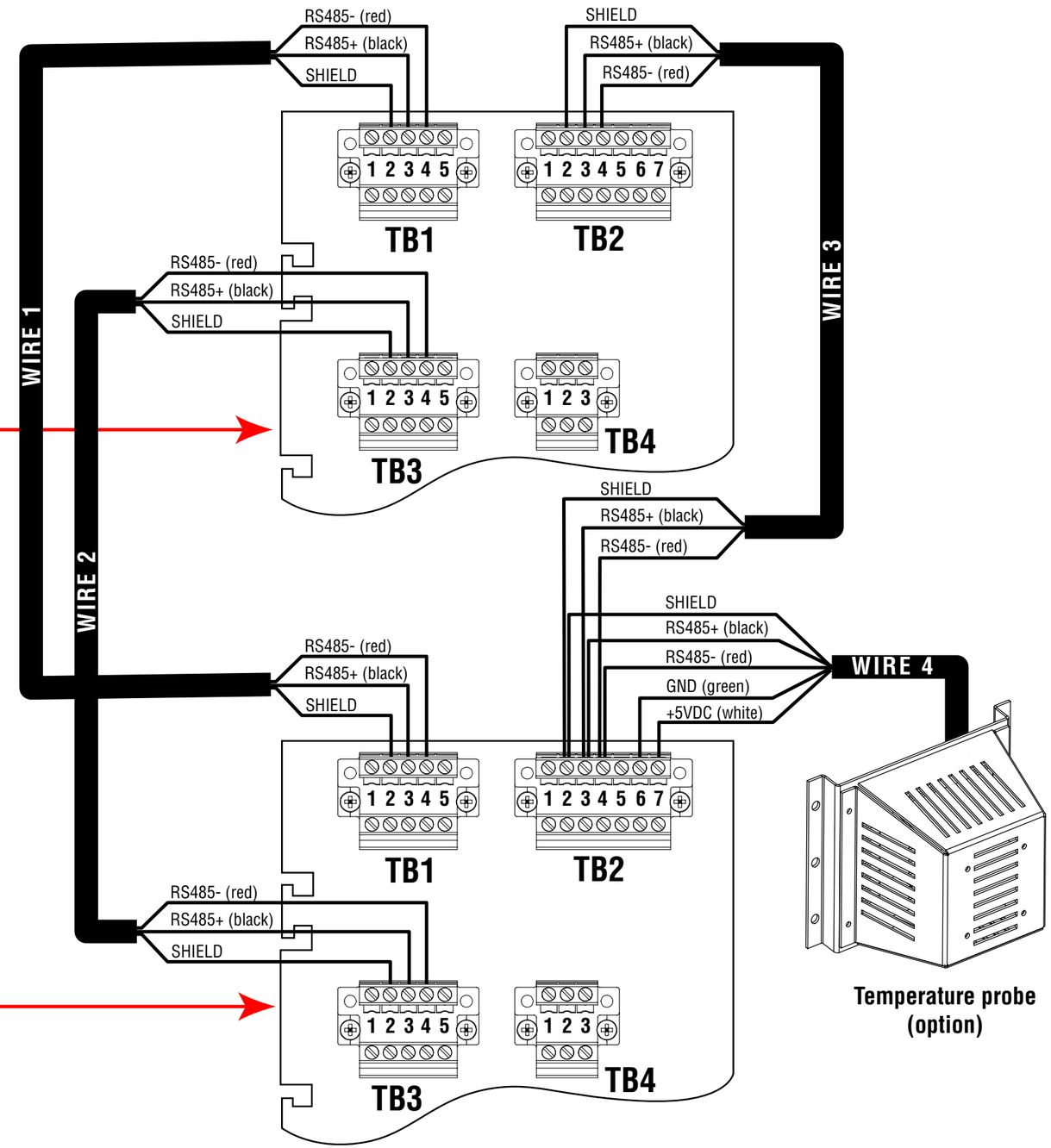

© Copyright 2003 Adaptive Micro Systems, LLC. All rights reserved. Adaptive Micro Systems • 7840 North 86th Street • Milwaukee, WI 53224 USA • 414-357-2020 • 414-357-2029 (fax) • http://www.adaptivedisplays.com
Trademarked names appear throughout this document. Rather than list the names and entities that own the trademarks or insert a trademark symbol with each mention of the trademarked name, the publisher states that it is using names for editorial purposes and to the benefit of the trademark owner with no intention of improperly using the trademark.
The following are trademarks of Adaptive Micro Systems: Adaptive, Alpha, AlphaLert, AlphaNET, AlphaNet plus, AlphaEclipse, AlphaPremiere, AlphaTicker, AlphaVision, AlphaVision InfoTracker, Automode, BetaBrite, BetaBrite Director, BetaBrite Messaging Software, Big Dot, Director, EZ KEY II, EZ95, PagerNET, PPD, PrintPak, Serial Clock, Smart Alec, Solar, TimeNet.
The distinctive trade dress of this product is a trademark claimed by Adaptive Micro Systems, LLC. • Due to continuing product innovation, specifications in this manual are subject to change without notice.